REVISIONS					
ZONE	REV	DESCRIPTION	DATE	BY	APVD.

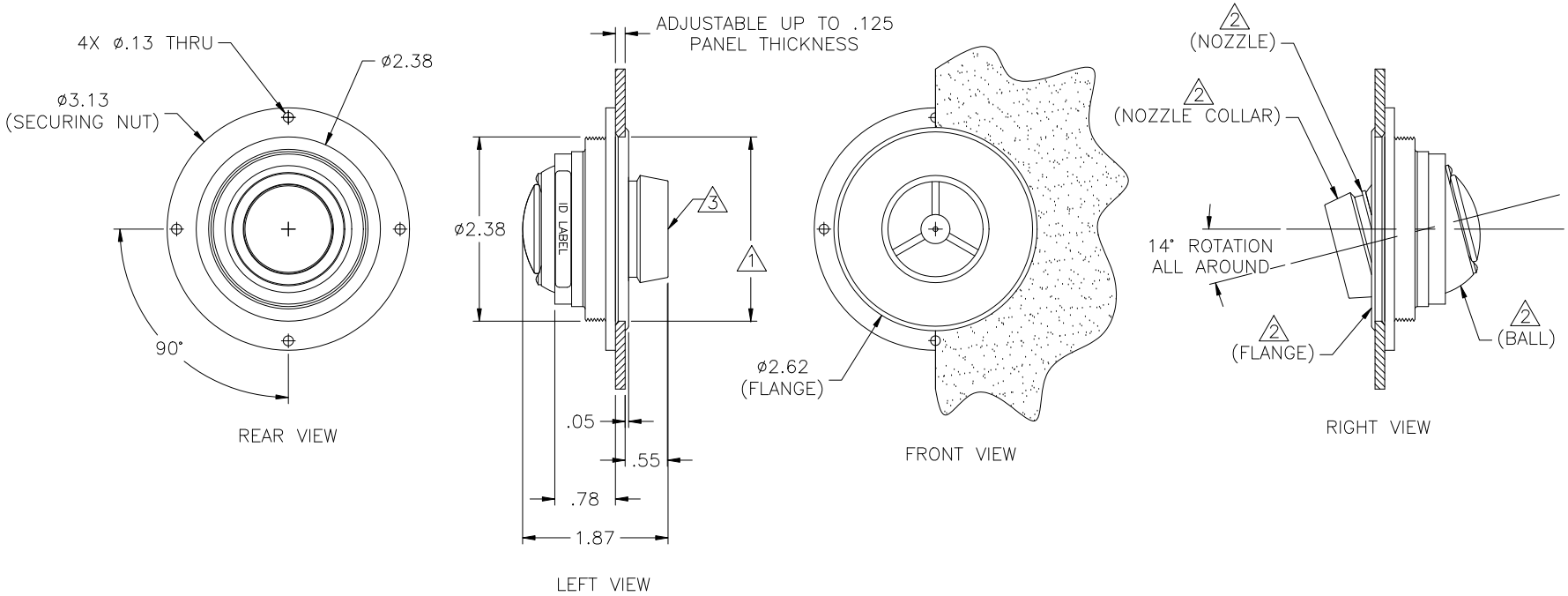

AG01A-50-50	ADJUSTABLE GASPER
PART NUMBER	DESCRIPTION

3 ASSEMBLE -01 PER DWG No. AGx-EXP.

2 FINISH: REFER TO SALES ORDER AND DWG. No. 274-101 FOR FINISH DASH No. COMPLETE ASSEMBLY No. IS AGx-X (FINISH)

1 SIZE OF MOUNTING HOLE FOR INSTALLATION OF UNIT SHOULD BE ø2.40-ø2.50.

NOTES: UNLESS OTHERWISE SPECIFIED.

QTY	PART NO.	DESCRIPTION	SPECIFICATION	MATERIAL OR NOTE	ITEM

LIST OF MATERIALS

NEXT ASS'Y	USED ON

THIS DOCUMENT CONTAINS PROPRIETARY INFORMATION EXCLUSIVE TO DPI LABS INC. AND SHALL NOT BE USED, DUPLICATED, OR DISCLOSED IN WHOLE OR IN PART FOR MANUFACTURE, PROCUREMENT, OR OTHER PURPOSES EXCEPT AS AUTHORIZED IN WRITING BY DPI LABS INC.

UNLESS OTHERWISE SPECIFIED: DIMENSIONS ARE IN INCHES AND APPLY AFTER FINISH
TOLERANCES:
XX ± .010
XXX ± .005
ANGULAR ± 0° 30'
SURFACE FINISH 63√

MAX. WEIGHT: GRAMS

MATERIAL:

FINISH:

APPROVALS		DATE
DRAWN	A. CANNATA	05/10/06
DESIGNED		
CHECKED		
ENG. APPR.		
Q.A. APPR.		
PROD. APPR.		

DPI LABS INC.
A HIGH TECHNOLOGY COMPANY
1350 ARROW HIGHWAY, LA VERNE, CA 91750 USA

ADJUSTABLE GASPER

SIZE	CAGE NO.	DWG NO.	REV
C	ØNØX3	AGx	N/C

SCALE NONE | DO NOT SCALE DRAWING | SHEET 1 OF 1 | REF. FILE NO. AGx